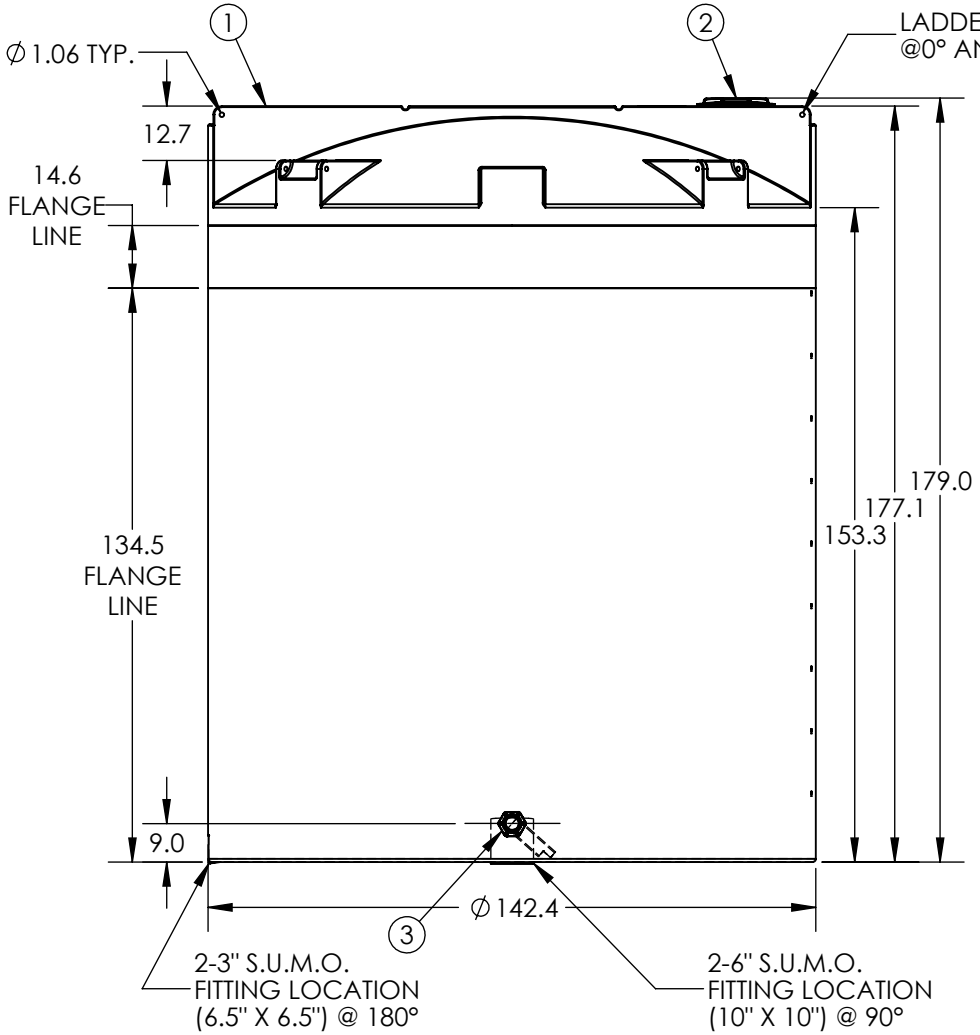

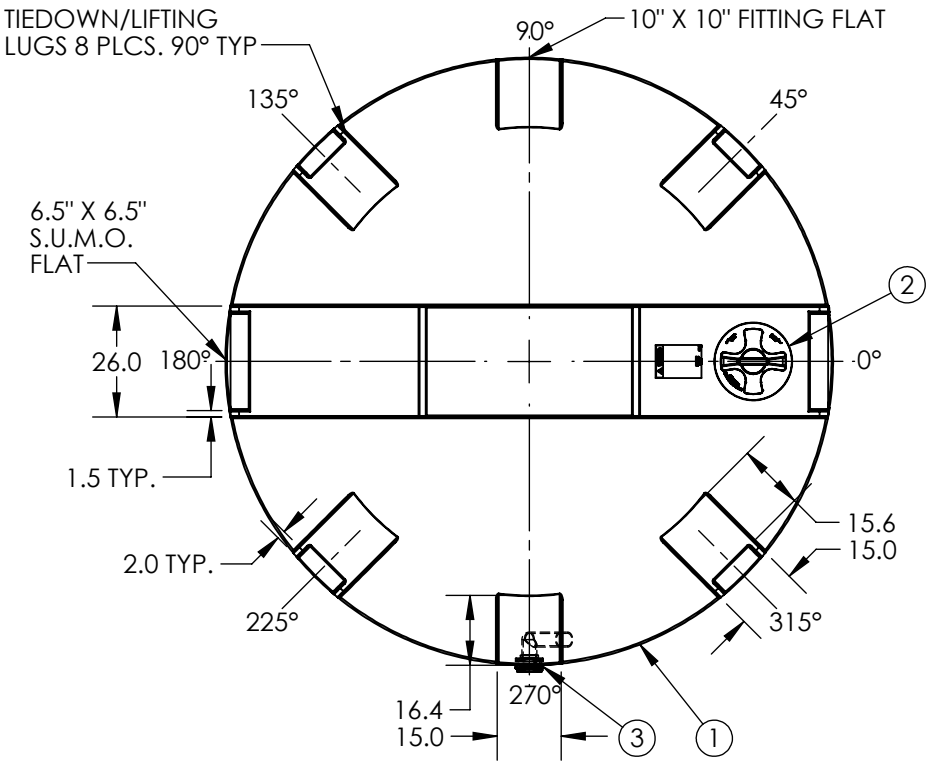

ITEM NO.	QTY.	PART NUMBER	DESCRIPTION
3	1	34700843	ASM SIPHON/BLTD PP/EPDM 3IN X LONG
2	1	34700087	ASM MANWAY 18IN PE W/4IN VENT W/TIE SII
1	1	5330300C___02	ASM TK 10500VNT X 144 NH NOMW

DO NOT SCALE | DRAWN BY ET5

STATUS: **Released**

© SNYDER INDUSTRIES, INC., 2018

ALL DIMENSIONS, DESIGNS, AND INFORMATION ON THIS PRINT MUST BE CONSIDERED PROPRIETARY TO SNYDER INDUSTRIES, INC. AND MAY NOT BE USED, COPIED, OR DISTRIBUTED WITHOUT WRITTEN PERMISSION OF AN OFFICER (OR HIS AGENT) OF THE FIRM.

SII SNYDER INDUSTRIES, INC.
(402) 467-5221
www.snydernet.com

TITLE: **ASM TK 10500VNT X 144 3IN SIPH**

REVISION: **A**

SHEET: 1 OF 1

PART NO.: **5330300C___04**

ENG. ID.: **D004170**

***ALL EXTERNAL PIPING MUST BE INDEPENDENTLY SUPPORTED.**
***ONLY BASE FITTINGS TO BE LEFT INSTALLED AT TIME OF SHIPMENT PER SII PROCEDURE.**
ALL DIMENSIONS ARE IN INCHES, NOMINAL, & SUBJECT TO CHANGE WITHOUT NOTICE.
ALL DIMENSIONS ON ROTATIONAL MOLDED PARTS ARE SUBJECT TO A ± 3% TOLERANCE.