| PART NUMBER | COLOR |
|---|---|
| 32004 | BLACK 1.5 |
| 32006 | NATURAL 1.5 |
| 32008 | NATURAL 1.9 |
| 32010 | BLACK 1.9 |

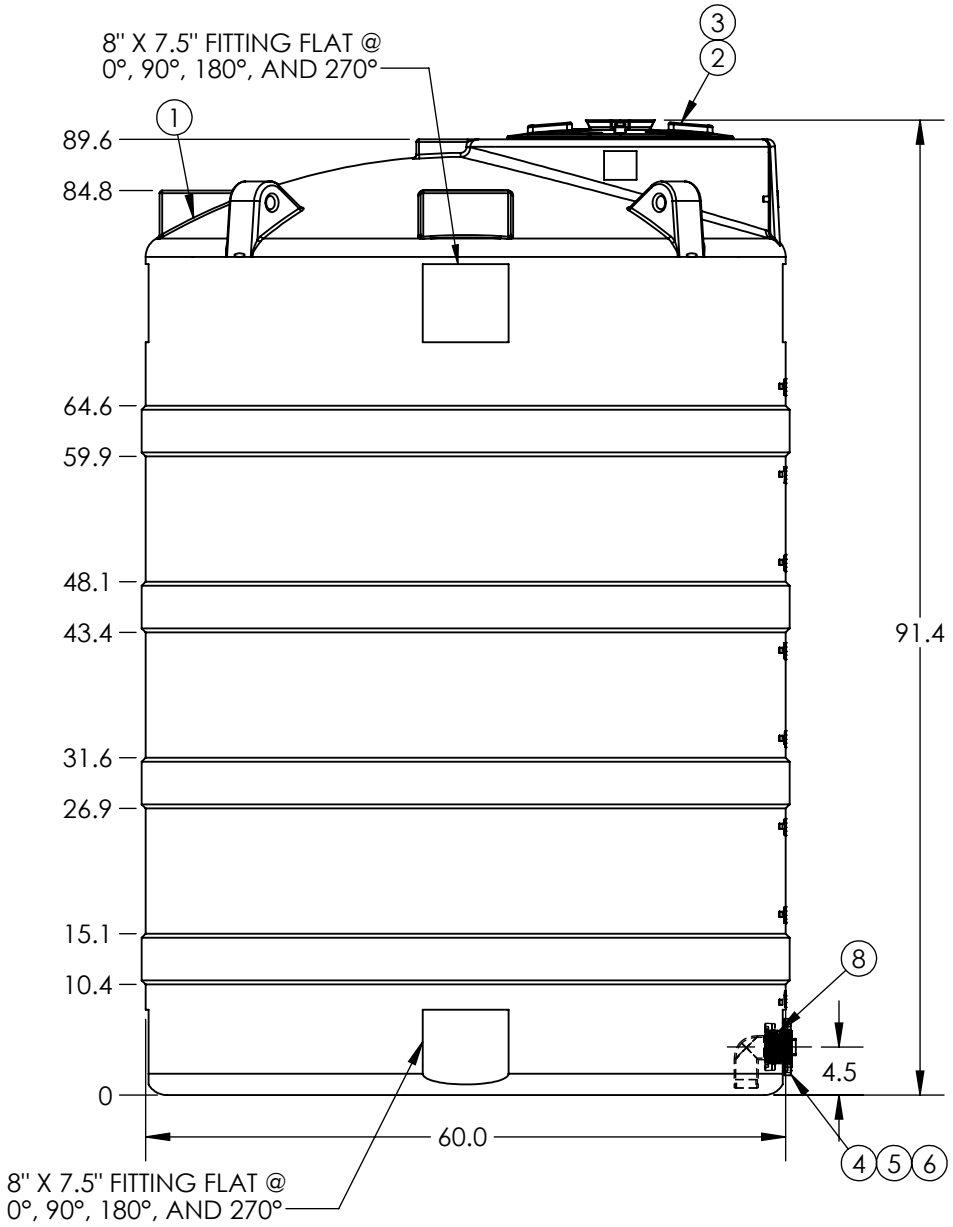


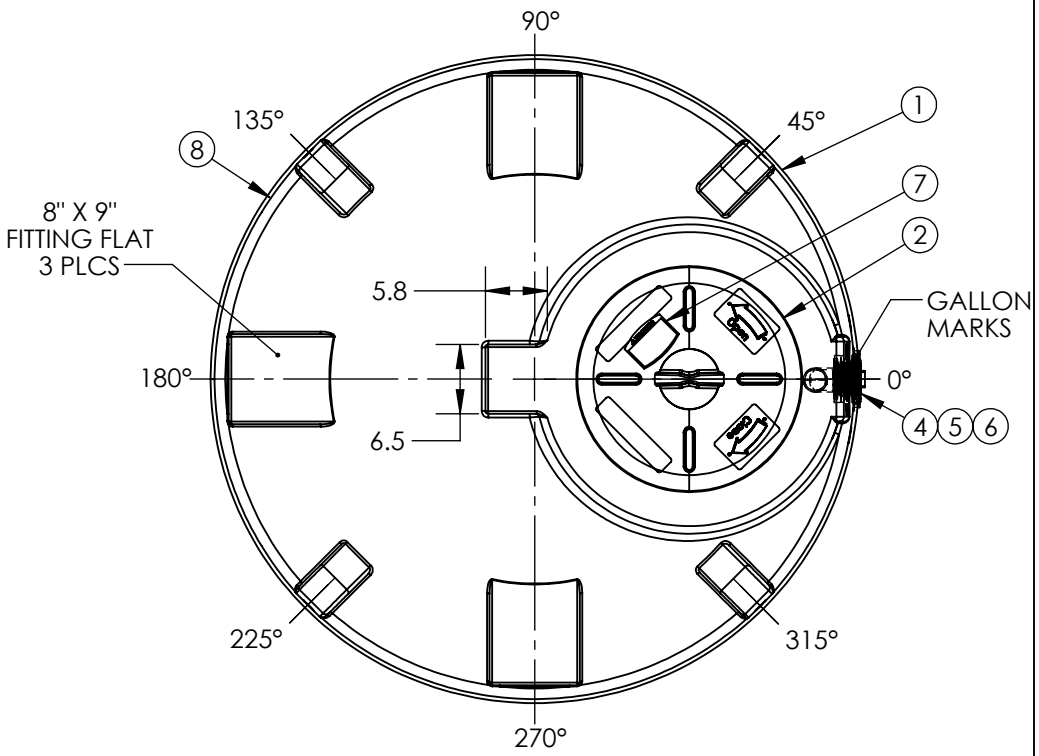


| ITEM NO. | QTY. | PART NUMBER | DESCRIPTION |
|---|---|---|---|
| 8 | 1 | 61847 | DECAL AG WARNING - SMALL |
| 7 | 1 | 61848 | DECAL AG WARNING - LARGE |
| 6 | 1 | 60335 | SIPHON TUBE PP 2IN X 3-3/4LG |
| 5 | 1 | 60021 | 2" NPT PLUG |
| 4 | 1 | 63683 | FTG 2IN HD BH PP/EPDM |
| 3 | 8 | 60081 | SCREW #9 X 1" SS 5"-22" LID |
| 2 | 1 | 64448 | MANWAY 20IN W/VENT R |
| 1 | 1 | 30339 | 1000V X 60 RP |

***FITTINGS ARE CENTERED IN BOTTOM FITTING FLATS & FITTING HEIGHTS MAY VARY.**
***ALL EXTERNAL PIPING MUST BE INDEPENDENTLY SUPPORTED.**
***ONLY BASE FITTINGS TO BE LEFT INSTALLED AT TIME OF SHIPMENT PER SII PROCEDURE.**
**ALL DIMENSIONS ARE IN INCHES, NOMINAL, & SUBJECT TO CHANGE WITHOUT NOTICE.**
**ALL DIMENSIONS ON ROTATIONAL MOLDED PARTS ARE SUBJECT TO A ± 3% TOLERANCE.**

DO NOT SCALE | DRAWN BY: IGG

STATUS: **Released**

© TANK HOLDING, CORP, 2023

ALL DIMENSIONS, DESIGNS, AND INFORMATION ON THIS PRINT MUST BE CONSIDERED PROPRIETARY TO TANK HOLDING, CORP, AND MAY NOT BE USED, COPIED, OR DISTRIBUTED WITHOUT WRITTEN PERMISSION OF AN OFFICER (OR HIS AGENT) OF THE FIRM.

SII SNYDER INDUSTRIES
A BRAND OF
TANK HOLDING CORP.
(402) 467-5221
www.snydernet.com

TITLE: **1000 V R WF**

REVISION: **B**

SHEET: 1 OF 1

PART NO.: **SEE CHART**

ENG. ID.: **A025148**