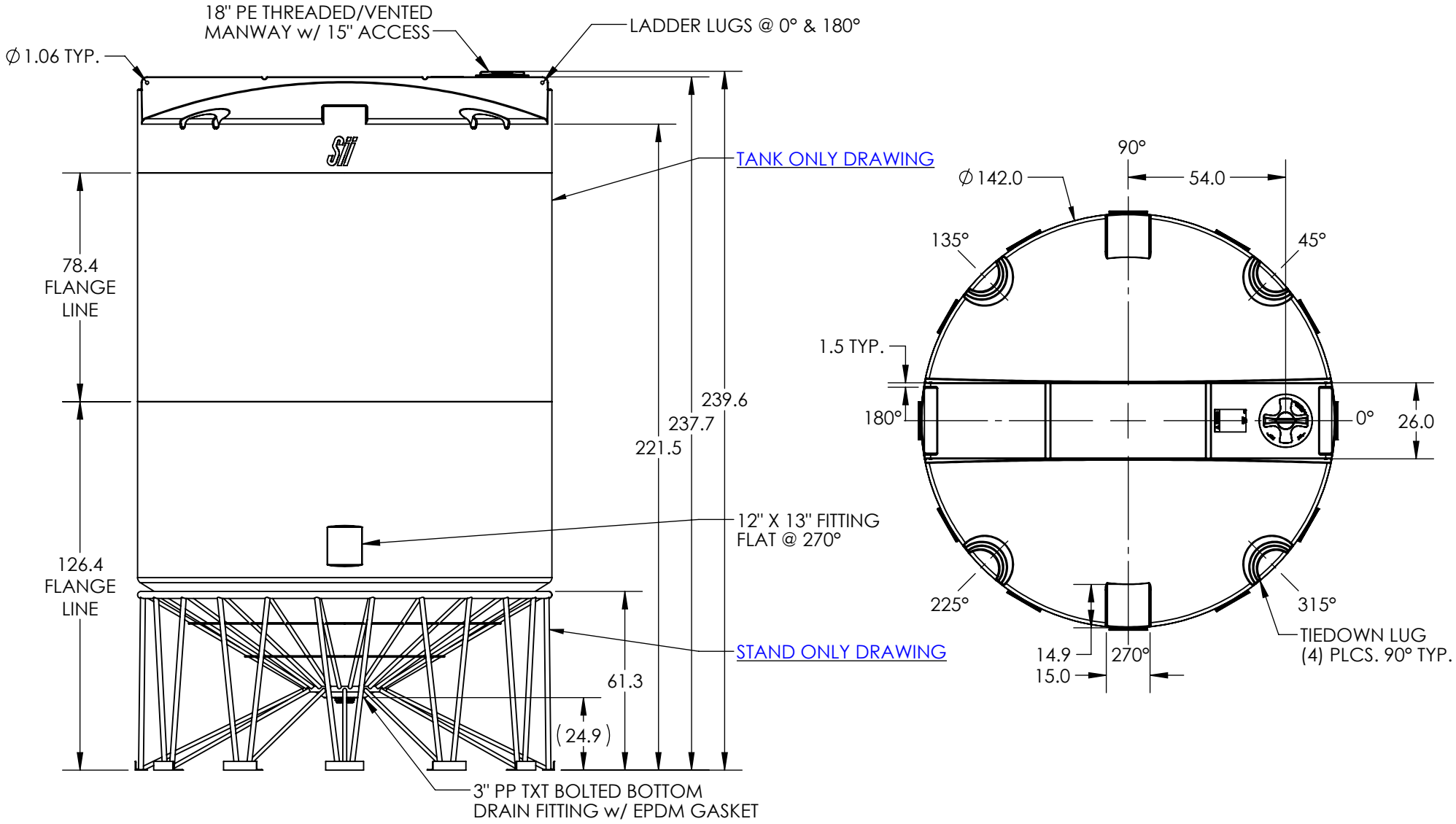

***ALL EXTERNAL PIPING MUST BE INDEPENDENTLY SUPPORTED.**
***ONLY BASE FITTINGS TO BE LEFT INSTALLED AT TIME OF SHIPMENT PER THC PROCEDURE.**
ALL DIMENSIONS ARE IN INCHES, NOMINAL, & SUBJECT TO CHANGE WITHOUT NOTICE.
ALL DIMENSIONS ON ROTATIONAL MOLDED PARTS ARE SUBJECT TO A ± 3% TOLERANCE.

DO NOT SCALE	DRAWN BY		TITLE:	REVISION
STATUS: **Released**	IGG	SNYDER INDUSTRIES A BRAND OF TANK HOLDING CORP.	**11850 GALLON CONE BOTTOM TANK W/ STAND**	**A**
				SHEET 1 OF 1
PART NO. **5340100C & 79500000**		ENG. ID. **A008752**		

© TANK HOLDING, CORP, 2025

ALL DIMENSIONS, DESIGNS, AND INFORMATION ON THIS PRINT MUST BE CONSIDERED PROPRIETARY TO TANK HOLDING, CORP., AND MAY NOT BE USED, COPIED, OR DISTRIBUTED WITHOUT WRITTEN PERMISSION OF AN OFFICER (OR HIS AGENT) OF THE FIRM.

(402) 467-5221
www.snydernet.com