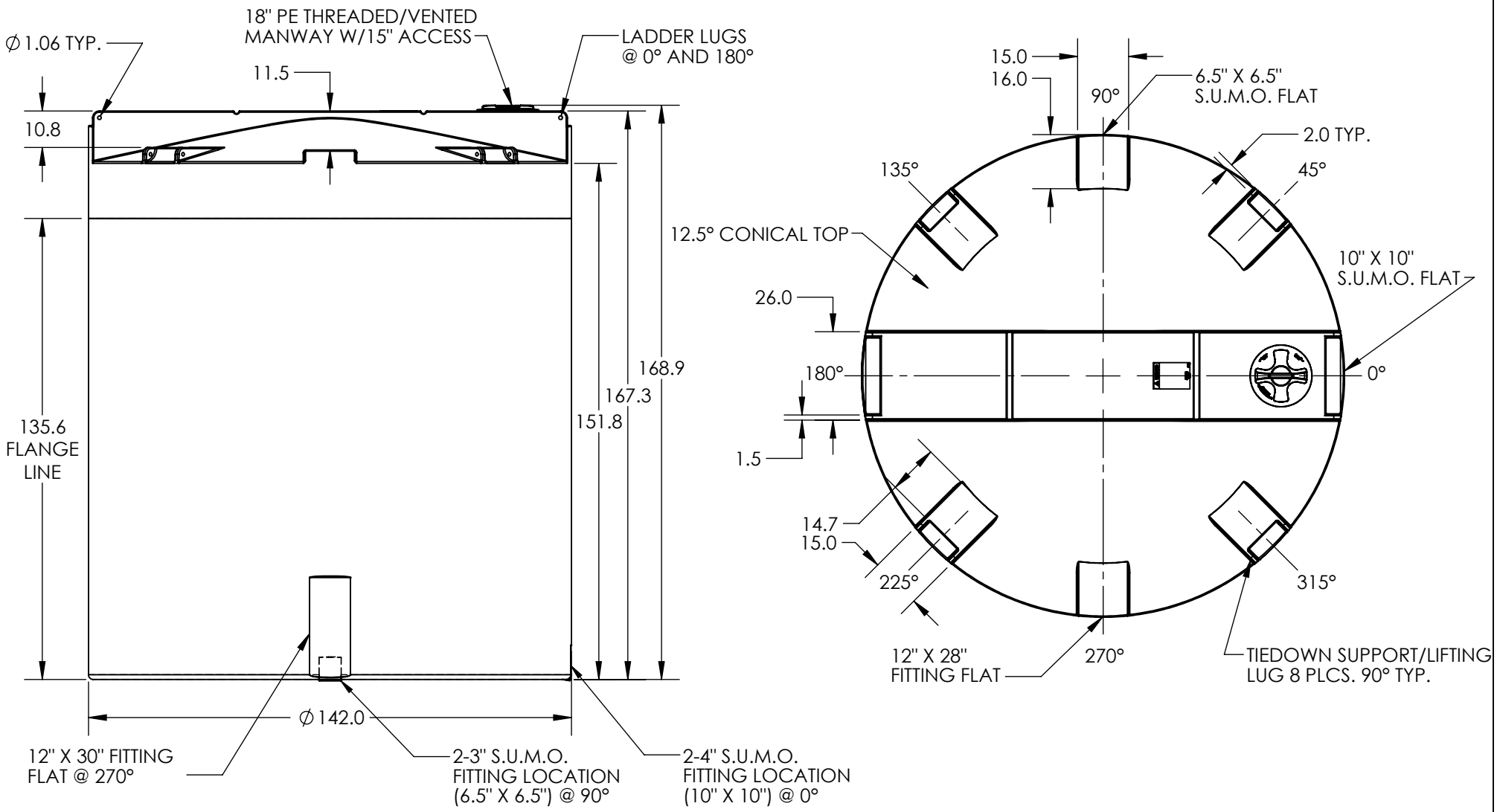

***ALL EXTERNAL PIPING MUST BE INDEPENDENTLY SUPPORTED.**
***ONLY BASE FITTINGS TO BE LEFT INSTALLED AT TIME OF SHIPMENT PER SII PROCEDURE.**
***Consult Snyder's Guidelines for Use and Installation prior to delivery.**
Available on-line at http://www.snyderindustriestanks.com/Technical

ALL DIMENSIONS ARE IN INCHES, NOMINAL, & SUBJECT TO CHANGE WITHOUT NOTICE.
ALL DIMENSIONS ON ROTATIONAL MOLDED PARTS ARE SUBJECT TO A ± 3% TOLERANCE.

DO NOT SCALE	DRAWN BY	SNYDER INDUSTRIES, INC.	TITLE: ASM TK 10500VDT X 142	REVISION B
STATUS: Released	ET3			SHEET 1 OF 1
© SNYDER INDUSTRIES, INC., 2019		(402) 467-5221 www.snydernet.com	PART NO. 5330000N	ENG. ID. D001069

ALL DIMENSIONS, DESIGNS, AND INFORMATION ON THIS PRINT MUST BE CONSIDERED PROPRIETARY TO SNYDER INDUSTRIES, INC. AND MAY NOT BE USED, COPIED, OR DISTRIBUTED WITHOUT WRITTEN PERMISSION OF AN OFFICER (OR HIS AGENT) OF THE FIRM.