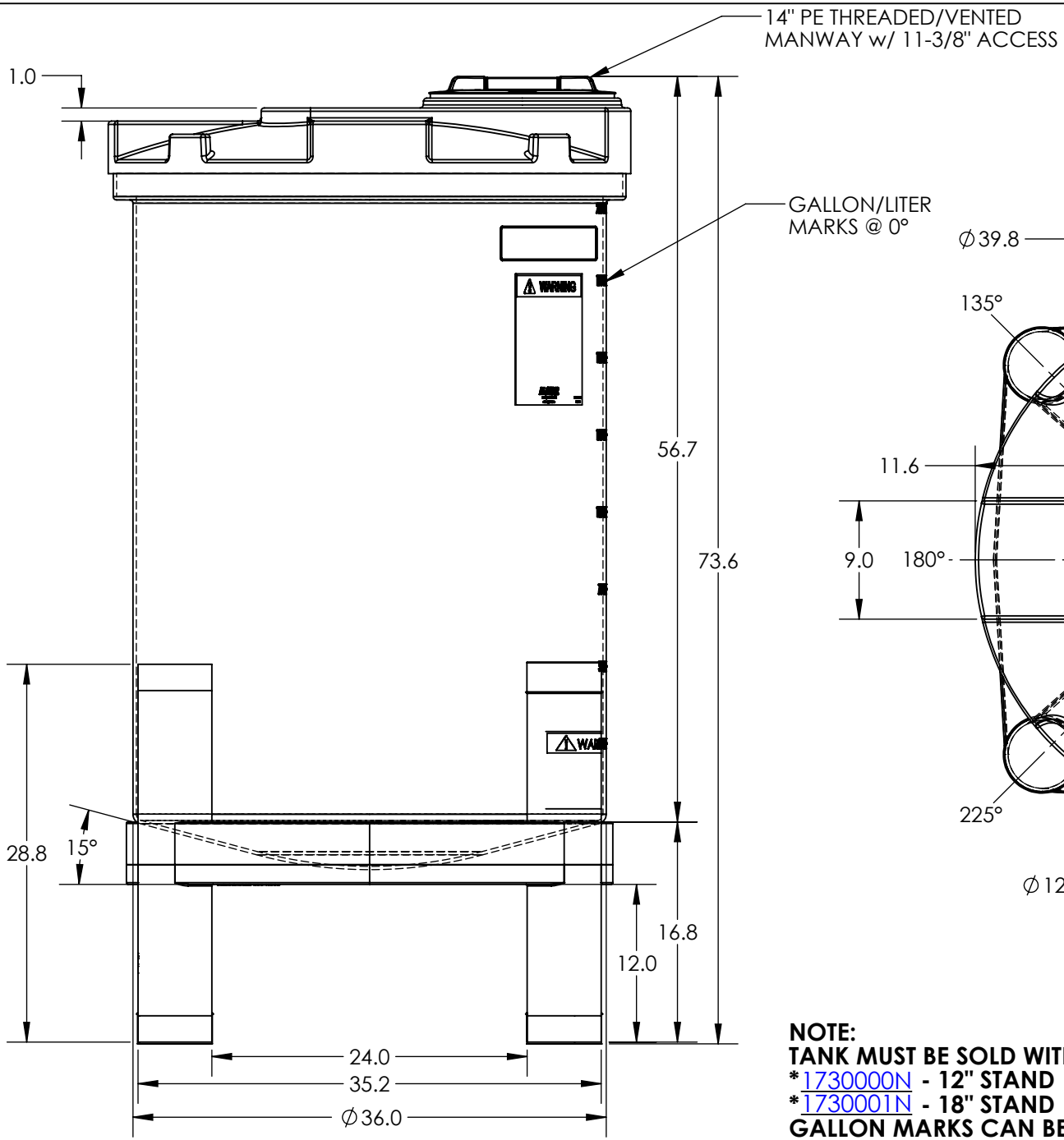

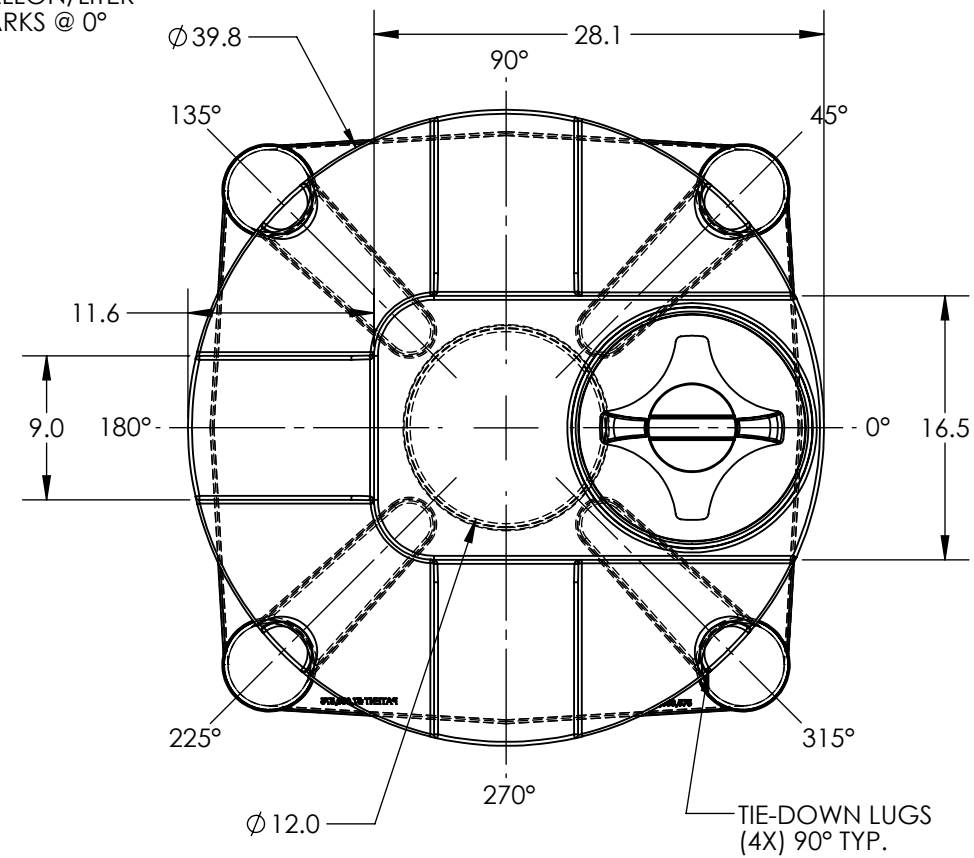

NOTE:
TANK MUST BE SOLD WITH A STAND.
***1730000N - 12" STAND**
***1730001N - 18" STAND**
GALLON MARKS CAN BE REMOVED FOR FITTING PLACEMENT AS NEEDED.

***ALL EXTERNAL PIPING MUST BE INDEPENDENTLY SUPPORTED.**
***ONLY BASE FITTINGS TO BE LEFT INSTALLED AT TIME OF SHIPMENT PER SII PROCEDURE.**
***Consult Snyder's Guidelines for Use and Installation prior to delivery.**
Available on-line at http://www.snyderindustriestanks.com/Technical

ALL DIMENSIONS ARE IN INCHES, NOMINAL, & SUBJECT TO CHANGE WITHOUT NOTICE.
ALL DIMENSIONS ON ROTATIONAL MOLDED PARTS ARE SUBJECT TO A ± 3% TOLERANCE.

DO NOT SCALE	DRAWN BY		TITLE:	REVISION
STATUS: **Released**	IGG		**ASM TK 200VNT X 36 TD W/ 12" STAND**	**A**
				SHEET 1 OF 1
© SNYDER INDUSTRIES INC., 2015			PART NO. **5720101N & 1730000N**	ENG. ID. **A002667**

ALL DIMENSIONS, DESIGNS, AND INFORMATION ON THIS PRINT MUST BE CONSIDERED PROPRIETARY TO SNYDER INDUSTRIES, INC. AND MAY NOT BE USED, COPIED, OR DISTRIBUTED WITHOUT WRITTEN PERMISSION OF AN OFFICER (OR HIS AGENT) OF THE FIRM.

(402) 467-5221
www.snydernet.com